Current part is item (4) on diagram. Available at www.oshkoshequipment.com



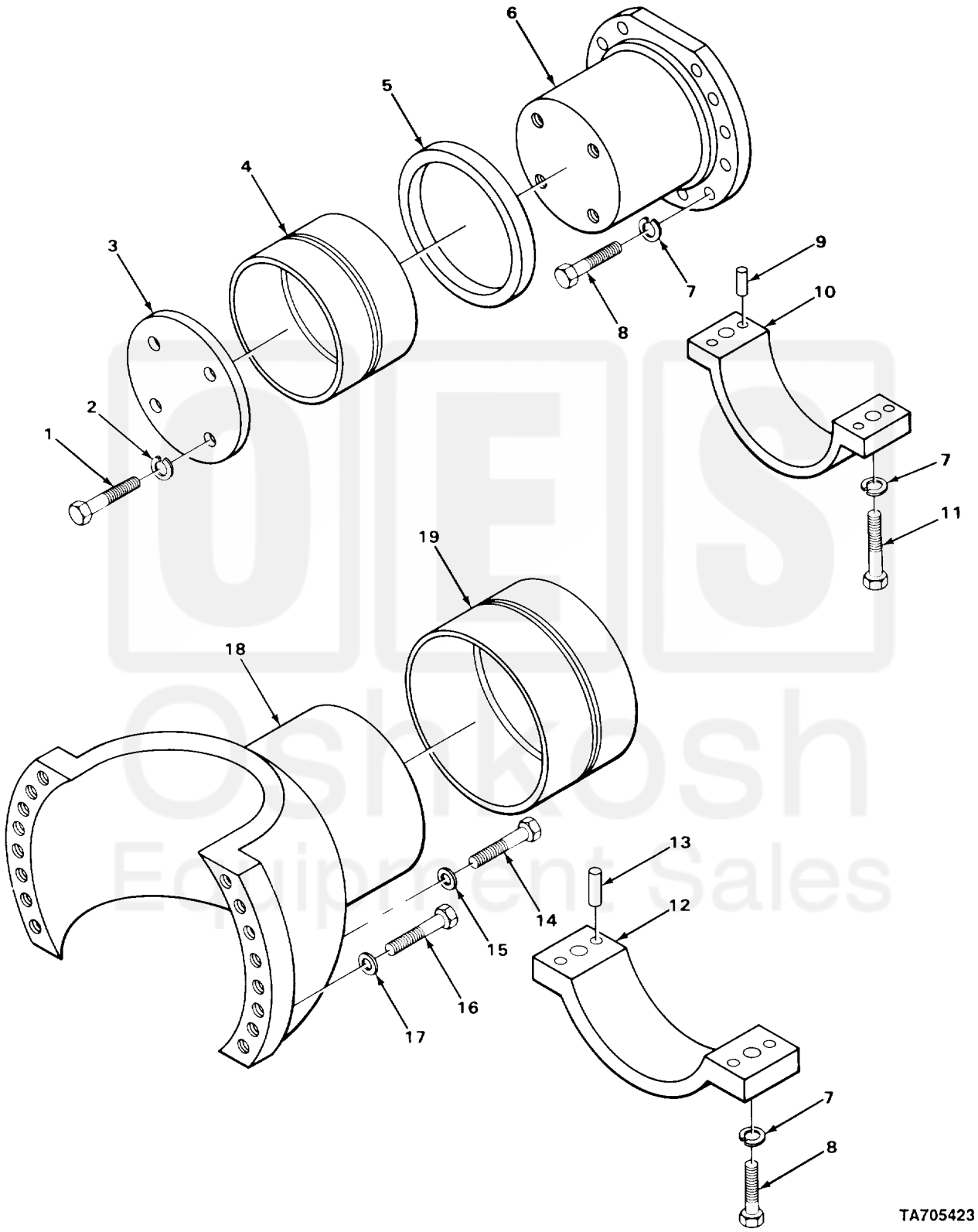


FIGURE 97. TRUNNIONS, INNER AND OUTER.

Current part is item (4) on diagram. Available at www.oshkoshequipment.com

Current part is item (4) on diagram. Available at www.oshkoshequipment.com



| (1) ITEM NO | (2) SMR CODE | (3) CAGEC | (4) PART NUMBER | (5) DESCRIPTION AND USABLE ON CODES (UOC) | (6) QTY |
|---|---|---|---|---|---|
| | | | | GROUP 1000 FRONT AXLE ASSEMBLY | |
| | | | | FIG. 97 TRUNNIONS, INNER AND OUTER | |
| 1 | PFHZZ | 96906 | MS90728-185 | .SCREW,CAP,HEXAGON H PLATE MTG | 8 |
| 2 | PFHZZ | 96906 | MS35338-51 | .WASHER,LOCK TRUNNION MTG | 8 |
| 3 | XDHZZ | 03677 | LT1-543 | .PLATE BEARING RETAINING | 2 |
| 4 | PAHZZ | 03677 | LT1-777 | .BEARING,SLEEVE | 2 |
| 5 | PAHZZ | 03677 | LT1-527 | .SPACER,RING TRUNNION BEARING | 2 |
| 6 | PAHZZ | 03504 | 118147 | .TRUNNION,PIVOT | 2 |
| 7 | PFHZZ | 96906 | MS35338-50 | .WASHER,LOCK | 38 |
| 8 | XDHZZ | 03504 | 118179 | .SCREW,CAP,HEXAGON H | 38 |
| 9 | PFHZZ | 96906 | MS16555-392 | .PIN,STRAIGHT,HEADLE BEARING PLATE | 8 |
| 10 | XDHZZ | 03677 | LT1-539 | .CAP,AXLE MOUNT | 2 |
| 11 | PFHZZ | 96906 | MS90727-172 | .SCREW,CAP,HEXAGON H CAP MOUNTING | 8 |
| 12 | XDHZZ | 03677 | LT1-538 | .CAP,PILLOW BLOCK | 2 |
| 13 | PFHZZ | 96906 | MS16555-394 | .PIN,STRAIGHT,HEADLE BEARING PLATE | 8 |
| 14 | PAHZZ | 03504 | 118178 | .BOLT,MACHINE TRUNNION MOUNTING | 4 |
| 15 | PAHZZ | 53496 | C0UH224 | .WASHER,FLAT TRUNNION MOUNTING | 4 |
| 16 | PAHZZ | 03504 | 118177 | .SCREW,CAP,HEXAGON H TRUNNION MTG | 24 |
| 17 | PAHZZ | 03504 | 112284 | .WASHER,FLAT TRUNNION MTG | 24 |
| 18 | XDHZZ | 12603 | 118146 | .TRUNNION,CENTER PIV | 2 |
| 19 | PFHZZ | 03677 | LT1-778 | .BEARING,SLEEVE | 2 |
| | | | | END OF FIGURE | |



Current part is item (4) on diagram. Available at www.oshkoshequipment.com

Current part is item (4) on diagram. Available at www.oshkoshequipment.com



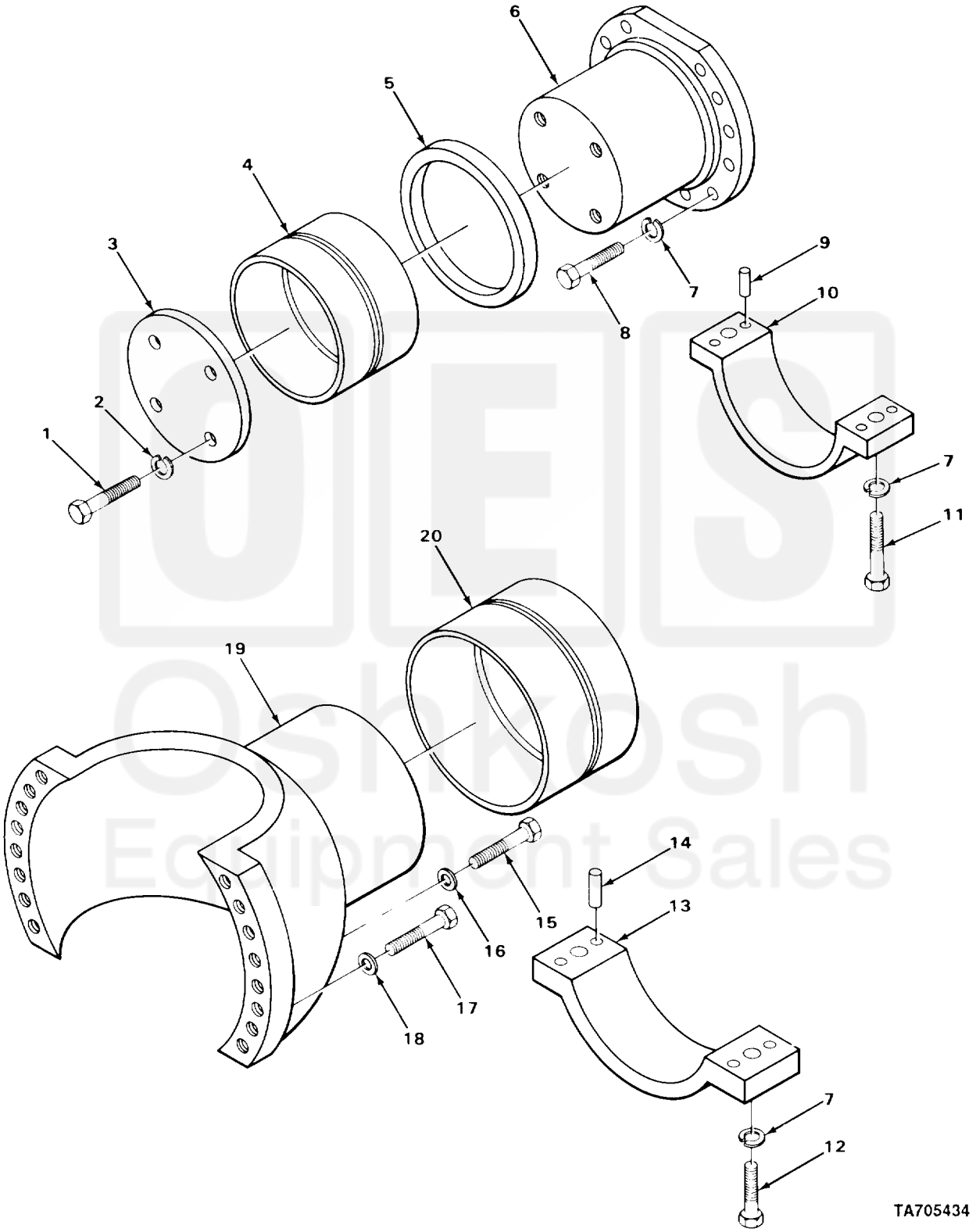


FIGURE 108. TRUNNIONS, INNER AND OUTER

Current part is item (4) on diagram. Available at www.oshkoshequipment.com

Current part is item (4) on diagram. Available at www.oshkoshequipment.com

| (1) ITEM NO | (2) SMR CODE | (3) CAGEC | (4) PART NUMBER | (5) DESCRIPTION AND USABLE ON CODES (UOC) | (6) QTY |
|---|---|---|---|---|---|
| | | | | GROUP 1100 REAR AXLE ASSEMBLY | |
| | | | | FIG. 108 TRUNNIONS, INNER AND OUTER | |
| 1 | PFHZZ | 96906 | MS90728-185 | .SCREW,CAP,HEXAGON H PLATE MOUNTING | 8 |
| 2 | PFHZZ | 96906 | MS35338-51 | .WASHER,LOCK PLATAE MTG | 8 |
| 3 | XBHZZ | 04285 | S67952 | .PLATE,BEARING RETAINER | 2 |
| 4 | PAHZZ | 03677 | LT1-777 | .BEARING,SLEEVE AXLE | 2 |
| 5 | PAHZZ | 03677 | LT1-527 | .SPACER,RING TRUNNION MTG | 2 |
| 6 | PAHZZ | 03504 | 118147 | .TRUNNION,PIVOT | 2 |
| 7 | PFHZZ | 96906 | MS35338-50 | .WASHER,LOCK | 19 |
| 8 | XDHZZ | 03504 | 118179 | .SCREW,CAP,HEXAGON H TRUNNION MOUNTING | 15 |
| 9 | PFHZZ | 96906 | MS16555-392 | .PIN,STRAIGHT,HEADLE BEARING PLATE | 8 |
| 10 | XAHZZ | 04285 | C67637X | .AXLE MOUNTING CAP | 2 |
| 11 | PFHZZ | 96906 | MS90727-169 | .SCREW,CAP,HEXAGON H CAP MTG | 4 |
| 12 | PFHZZ | 96906 | MS90727-168 | .SCREW,CAP,HEXAGON H AXLE MTG CAP | 4 |
| 13 | XAHZZ | 04285 | C67639X | .AXLE MOUNTING CAP | 2 |
| 14 | PFHZZ | 96906 | MS16555-392 | .PION,STRAIGHT,HEADLE BEARING CAP | 8 |
| 15 | PAHZZ | 03504 | 118178 | .BOLT,MACHINE TRUNNION MTG | 2 |
| 16 | PAHZZ | 53496 | HD224 | .WASHER,FLAT TRUNNION MTG | 17 |
| 17 | PAHZZ | 03504 | 118177 | .SCREW,CAP,HEXAGON H TRUNNION MTG | 48 |
| 18 | PAHZZ | 03504 | 112284 | .WASHER,FLAT TRUNNION MTG | 52 |
| 19 | XDHZZ | 12603 | 118146 | .TRUNNION,CENTER PIV | 2 |
| 20 | PFHZZ | 03677 | LT1-778 | .BEARING,SLEEVE AXLE | 2 |
| | | | | END OF FIGURE | |



Current part is item (4) on diagram. Available at www.oshkoshequipment.com